Global LCD Panel Exchange Center www.panelook.com 屏库:全球液晶屏交易中心

TFT LCD Approval Specification

MODEL NO.: M240J1- L01

Customer: _____

Approved by: _____

Note:

Liquid Crystal Display Division	
QRA Division	OA Head Division
Approval	Approval
陳 95.5.16 永一	Wu Chao-Wen 6/15'06 11:00

One step solution for LCD / PDP / OLED panel application: Datasheet, inventory and accessory! www.panelook.com

Global LCD Panel Exchange Center www.panelook.com 屏库:全球液晶屏交易中心

- CONTENTS -

REVISION HISTORY 3

1. GENERAL DESCRIPTION 4
   1.1 OVERVIEW
   1.2 FEATURES
   1.3 APPLICATION
   1.4 GENERAL SPECIFICATIONS
   1.5 MECHANICAL SPECIFICATIONS

2. ABSOLUTE MAXIMUM RATINGS 5
   2.1 ABSOLUTE RATINGS OF ENVIRONMENT
   2.2 ELECTRICAL ABSOLUTE RATINGS
      2.2.1 TFT LCD MODULE
      2.2.2 BACKLIGHT UNIT

3. ELECTRICAL CHARACTERISTICS 7
   3.1 TFT LCD MODULE
   3.2 BACKLIGHT UNIT

4. BLOCK DIAGRAM 11
   4.1 TFT LCD MODULE
   4.2 BACKLIGHT UNIT

5. INPUT TERMINAL PIN ASSIGNMENT 12
   5.1 TFT LCD MODULE
   5.2 BACKLIGHT UNIT
   5.3 COLOR DATA INPUT ASSIGNMENT

6. INTERFACE TIMING 15
   6.1 INPUT SIGNAL TIMING SPECIFICATIONS
   6.2 POWER ON/OFF SEQUENCE

7. OPTICAL CHARACTERISTICS 17
   7.1 TEST CONDITIONS
   7.2 OPTICAL SPECIFICATIONS

8. PACKAGING 21
   8.1 PACKING SPECIFICATIONS
   8.2 PACKING METHOD

9. DEFINITION OF LABELS 23

10. PRECAUTIONS 24
   10.1 ASSEMBLY AND HANDLING PRECAUTIONS
   10.2 SAFETY PRECAUTIONS

11. MECHANICAL CHARACTERISTICS 25

One step solution for LCD / PDP / OLED panel application: Datasheet, inventory and accessory! www.panelook.com

Global LCD Panel Exchange Center www.panelook.com 屏库:全球液晶屏交易中心

REVISION HISTORY

Version	Date	Section	Description
Ver 2.0	May 15, 06'	-	M240J1 -L01 Approval specifications was first issued.

www.panelook.com

One step solution for LCD / PDP / OLED panel application: Datasheet, inventory and accessory! www.panelook.com

Global LCD Panel Exchange Center www.panelook.com 屏库:全球液晶屏交易中心

1. GENERAL DESCRIPTION

1.1 OVERVIEW

M240J1-L01 is an 24.0" TFT Liquid Crystal Display module with 6 CCFL Backlight unit and 30 pins 2ch-LVDS interface. This module supports 1920 x 1200 WUXGA mode and can display up to 16.7M colors. The inverter module for Backlight is built in.

1.2 FEATURES

- Super MVA extra-wide viewing angle.
- High contrast ratio.
- Fast response time.
- High color saturation.
- WUXGA (1920 x 1200 pixels) resolution.
- DE (Data Enable) only mode.
- LVDS (Low Voltage Differential Signaling) interface.
- RoHS compliance.
- TCO'03 compliance.
- Flash function support by the inverter module that built in the Backlight unit.

1.3 APPLICATION

- TFT LCD Monitor

1.4 GENERAL SPECIFICATI0NS

Item	Specification	Unit	Note
Active Area	518.4 (H) x 324 (V) (24.0" diagonal)	mm	(1)
Bezel Opening Area	522.4 (H) x 328.0 (V)	mm	
Driver Element	a-si TFT active matrix	-	-
Pixel Number	1920 x R.G.B. x 1200	pixel	-
Pixel Pitch	0.270 (H) x 0.270 (V)	mm	-
Pixel Arrangement	RGB vertical stripe	-	-
Display Colors	16.7M	color	-
Transmissive Mode	Normally black	-	-
Surface Treatment	AG type: 3H hard coating, Haze 25	-	-

1.5 MECHANICAL SPECIFICATIONS

Item		Min.	Typ.	Max.	Unit	Note
Module Size	Horizontal(H)	545.9	546.4	546.9	mm	(1)
	Vertical(V)	351.5	352.0	352.5	mm	
	Depth(D)		35.36	35.86	mm	
Weight		-	-	2800	g	-

Note (1) Please refer to the attached drawings for more information of front and back outline dimensions.

One step solution for LCD / PDP / OLED panel application: Datasheet, inventory and accessory! www.panelook.com

Global LCD Panel Exchange Center www.panelook.com 屏库:全球液晶屏交易中心

2. ABSOLUTE MAXIMUM RATINGS

2.1 ABSOLUTE RATINGS OF ENVIRONMENT

Item	Symbol	Value		Unit	Note
		Min.	Max.		
Storage Temperature	T_{ST}	-20	60	ºC	(1)
Operating Ambient Temperature	T_{OP}	0	50	ºC	(1), (2)
Shock (Non-Operating)	S_{NOP}	-	50	G	(3), (5)
Vibration (Non-Operating)	V_{NOP}	-	1.5	G	(4), (5)

Note (1) Temperature and relative humidity range is shown in the figure below.

(a) 90 %RH Max. (Ta ≦ 40 ºC).

(b) Wet-bulb temperature should be 39 ºC Max. (Ta > 40 ºC).

(c) No condensation.

Note (2) The temperature of panel display surface area should be 0 ºC Min. and 60 ºC Max.

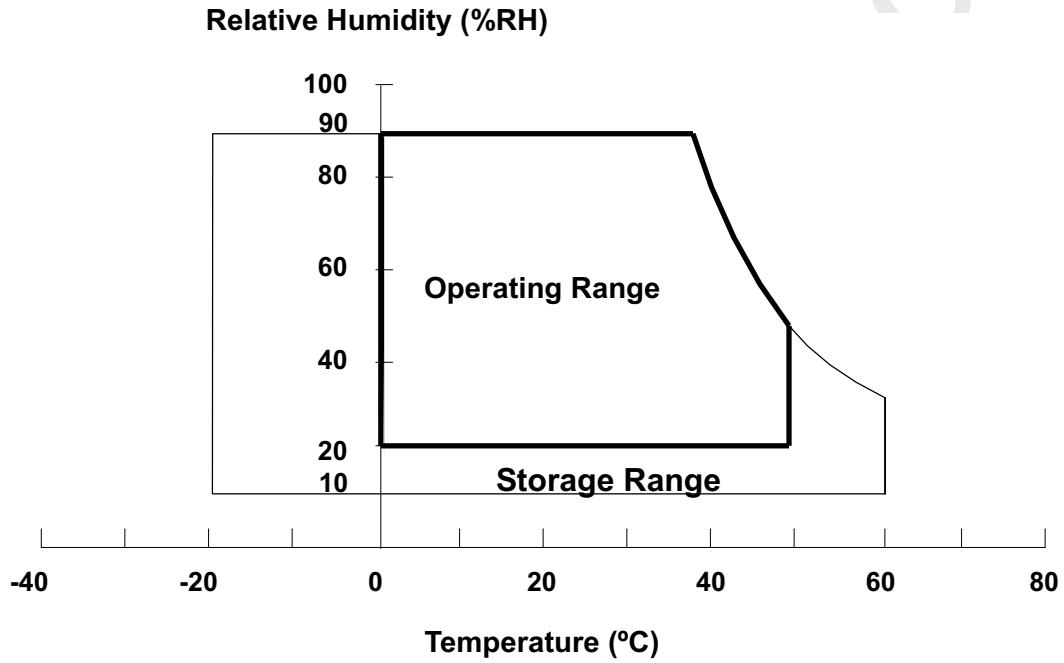

Note (3) 11ms, half sine wave, 1 time for ± X, ± Y, ± Z.

Note (4) 10 ~ 300 Hz, 10min/cycle, 3 cycles each X, Y, Z.

Note (5) At testing Vibration and Shock, the fixture in holding the module has to be hard and rigid enough so that the module would not be twisted or bent by the fixture.

The fixing condition is shown as below:

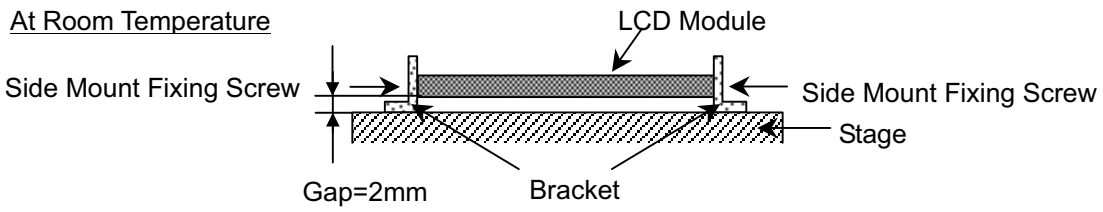

One step solution for LCD / PDP / OLED panel application: Datasheet, inventory and accessory! www.panelook.com

Global LCD Panel Exchange Center www.panelook.com 屏库:全球液晶屏交易中心

2.2 ELECTRICAL ABSOLUTE RATINGS

2.2.1 TFT LCD MODULE

Item	Symbol	Value		Unit	Note
		Min.	Max.		
Power Supply Voltage	Vcc	-0.3	+6.0	V	(1)
Logic Input Voltage	V_{IN}	-0.3	4.3	V	

2.2.2 BACKLIGHT UNIT

Item	Symbol	Value		Unit	Note
		Min.	Max.		
Lamp Voltage	V_L	-	4.5K	V_{RMS}	(1), (2)
Lamp Current	I_L	4.0	7.0	mA_{RMS}	(1), (2)
Lamp Frequency	F_L	40	80	KHz	

Note (1) Permanent damage to the device may occur if maximum values are exceeded. Function operation should be restricted to the conditions described under Normal Operating Conditions.

Note (2) Specified values are for lamp (Refer to 3.2 for further information).

www.panelook.com

One step solution for LCD / PDP / OLED panel application: Datasheet, inventory and accessory! www.panelook.com

Global LCD Panel Exchange Center www.panelook.com 屏库:全球液晶屏交易中心

3. ELECTRICAL CHARACTERISTICS

3.1 TFT LCD MODULE

Ta = 25 ± 2 ºC

Parameter		Symbol	Value			Unit	Note
			Min.	Typ.	Max.		
Power Supply Voltage		Vcc	4.5	5.0	5.5	V	-
Ripple Voltage		V_{RP}	-	-	100	mV	-
Rush Current		I_{RUSH}	-	2	4	A	(2)
Power Supply Current	White	-		1.8	2.2	A	(3)a
	Black	-		1.3	1.7	A	(3)b
	Vertical Stripe	-		1.7	2.1	A	(3)c
LVDS differential input voltage		Vid	100	-	600	mV	
LVDS common input voltage		Vic	-	1.2	-	V	
Logic "L" input voltage		Vil	Vss	-	0.8	V	

Note (1) The module should be always operated within above ranges.

Note (2) Measurement Conditions:

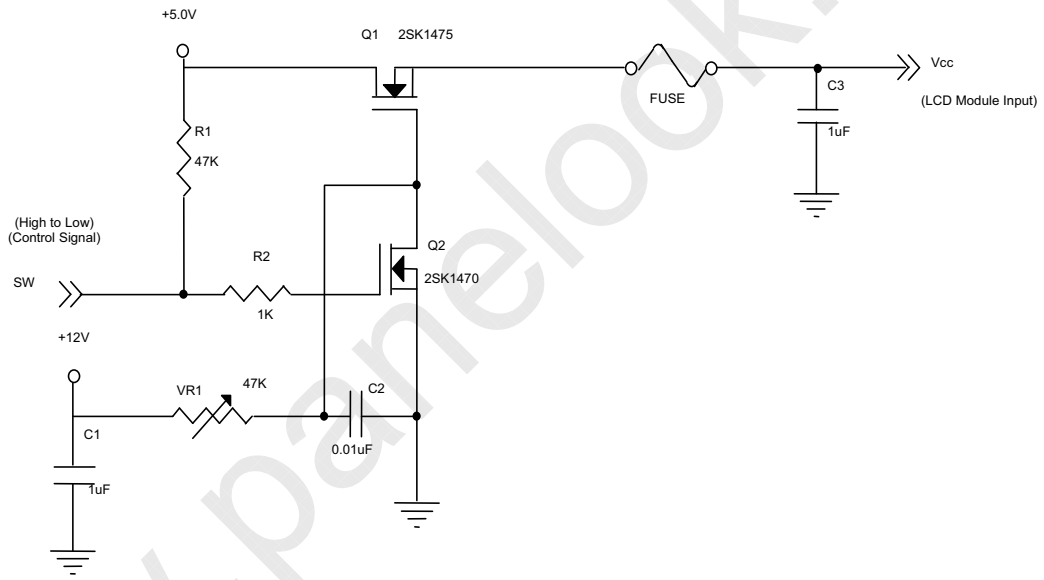

Vcc rising time is 470µs

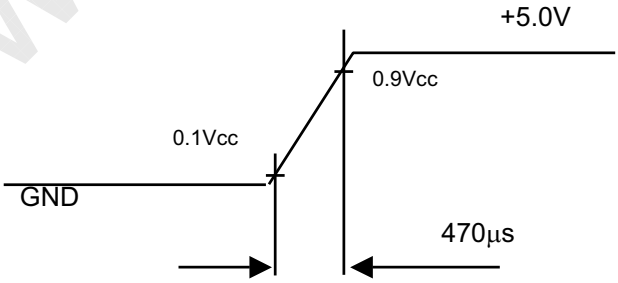

One step solution for LCD / PDP / OLED panel application: Datasheet, inventory and accessory! www.panelook.com

Global LCD Panel Exchange Center www.panelook.com 屏库:全球液晶屏交易中心

Note (3) The specified power supply current is under the conditions at Vcc = 5.0 V, Ta = 25 ± 2 ºC, f_v = 60 Hz, whereas a power dissipation check pattern below is displayed.

a. White Pattern

Active Area

b. Black Pattern

Active Area

c. Vertical Stripe Pattern

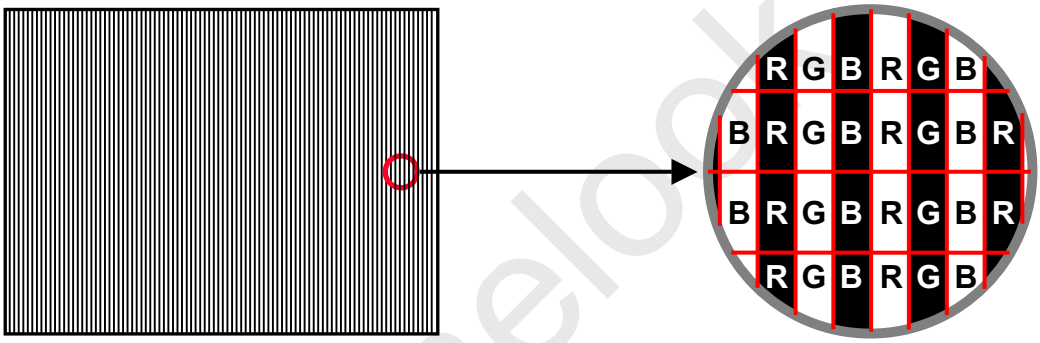

Active Area

www.panelook.com

One step solution for LCD / PDP / OLED panel application: Datasheet, inventory and accessory! www.panelook.com

Global LCD Panel Exchange Center www.panelook.com 屏库:全球液晶屏交易中心

3.2 BACKLIGHT UNIT

Ta = 25 ± 2 °C

Parameter	Symbol	Value			Unit	Note
		Min.	Typ.	Max.		
Lamp Input Voltage	V_L	1683	1870	2057	V_{RMS}	I_L = 6.0 mA
Lamp Current	I_L	4.0	6.0	7.0	mA_{RMS}	(1)
Lamp Turn On Voltage	V_S	---	---	3670 (25 °C)	V_{RMS}	(2)
		---	---	4280 (0 °C)	V_{RMS}	(2)
Operating Frequency	F_L	40	---	80	KHz	(3)
Lamp Life Time	L_{BL}	50,000	---	---	Hrs	(5), I_L = 6.0 mA
Power Consumption	P_L	---	67.32	---	W	(4), I_L = 6.0 mA

Note (1) Lamp current is measured by current amplify & oscilloscope as shown below:

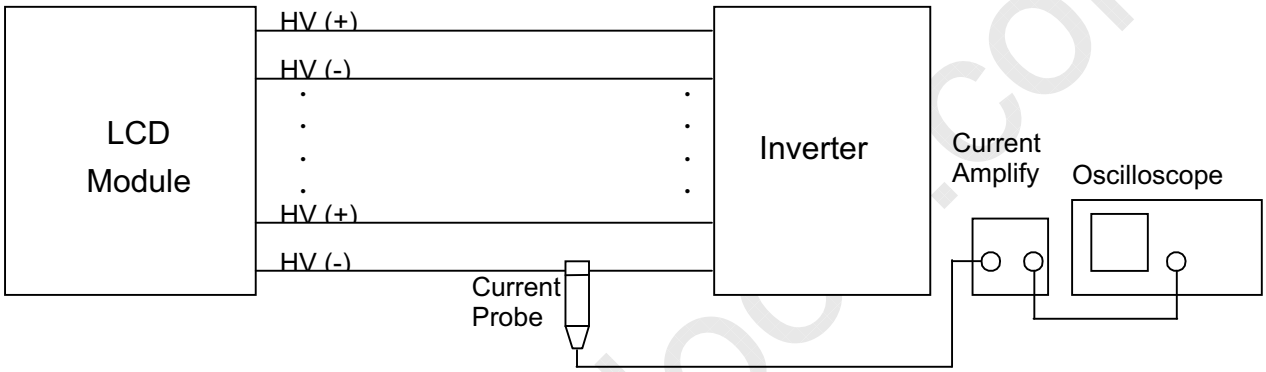

Measure equipment:
Current Amplify: Tektronix TCPA300
Current probe: Tektronix TCP312
Oscilloscope: TDS3054B

Note (2) The voltage that must be larger than Vs should be applied to the lamp for more than 1 second after startup. Otherwise, the lamp may not be turned on normally.

Note (3) The lamp frequency may produce interference with horizontal synchronization frequency from the display, which might cause line flow on the display. In order to avoid interference, the lamp frequency should be detached from the horizontal synchronization frequency and its harmonics as far as possible.

Note (4) $P_L = I_L \times V_L \times 6$

Note (5) The lifetime of lamp can be defined as the time in which it continues to operate under the condition Ta = 25 ±2 °C and I_L = 6.0 mArms until one of the following events occurs:

(a) When the brightness becomes or lower than 50% of its original value.

(b) When the effective ignition length becomes or lower than 80% of its original value. (Effective ignition length is defined as an area that has less than 70% brightness compared to the brightness in the center point.)

Note (6) The waveform of the voltage output of inverter must be area-symmetric and the design of the inverter must have specifications for the modularized lamp. The performance of the Backlight, such as lifetime or brightness, is greatly influenced by the characteristics of the DC-AC inverter for the lamp. All the parameters of an inverter should be carefully designed to avoid producing too

One step solution for LCD / PDP / OLED panel application: Datasheet, inventory and accessory! www.panelook.com

Global LCD Panel Exchange Center www.panelook.com 屏库:全球液晶屏交易中心

much current leakage from high voltage output of the inverter. When designing or ordering the inverter please make sure that a poor lighting caused by the mismatch of the Backlight and the inverter (miss-lighting, flicker, etc.) never occurs. If the above situation is confirmed, the module should be operated in the same manners when it is installed in your instrument.

The output of the inverter must have symmetrical (negative and positive) voltage waveform and symmetrical current waveform.(Unsymmetrical ratio is less than 10%) Please do not use the inverter which has unsymmetrical voltage and unsymmetrical current and spike wave. Lamp frequency may produce interface with horizontal synchronous frequency and as a result this may cause beat on the display. Therefore lamp frequency shall be as away possible from the horizontal synchronous frequency and from its harmonics in order to prevent interference.

Requirements for a system inverter design, which is intended to have a better display performance, a better power efficiency and a more reliable lamp. It shall help increase the lamp lifetime and reduce its leakage current.

a. The asymmetry rate of the inverter waveform should be 10% below;

b. The distortion rate of the waveform should be within $\sqrt{2} \pm 10\%$;

c. The ideal sine wave form shall be symmetric in positive and negative polarities

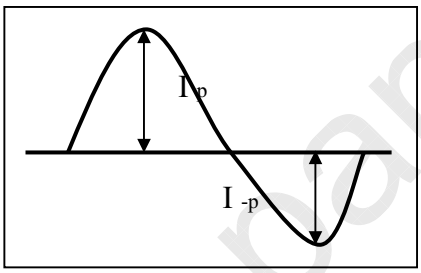

* Asymmetry rate:

$$| I_p - I_{-p} | / I_{rms} * 100\%$$

* Distortion rate

$$I_p \text{ (or } I_{-p}) / I_{rms}$$

One step solution for LCD / PDP / OLED panel application: Datasheet, inventory and accessory! www.panelook.com

Global LCD Panel Exchange Center www.panelook.com 屏库:全球液晶屏交易中心

4. BLOCK DIAGRAM

4.1 TFT LCD MODULE

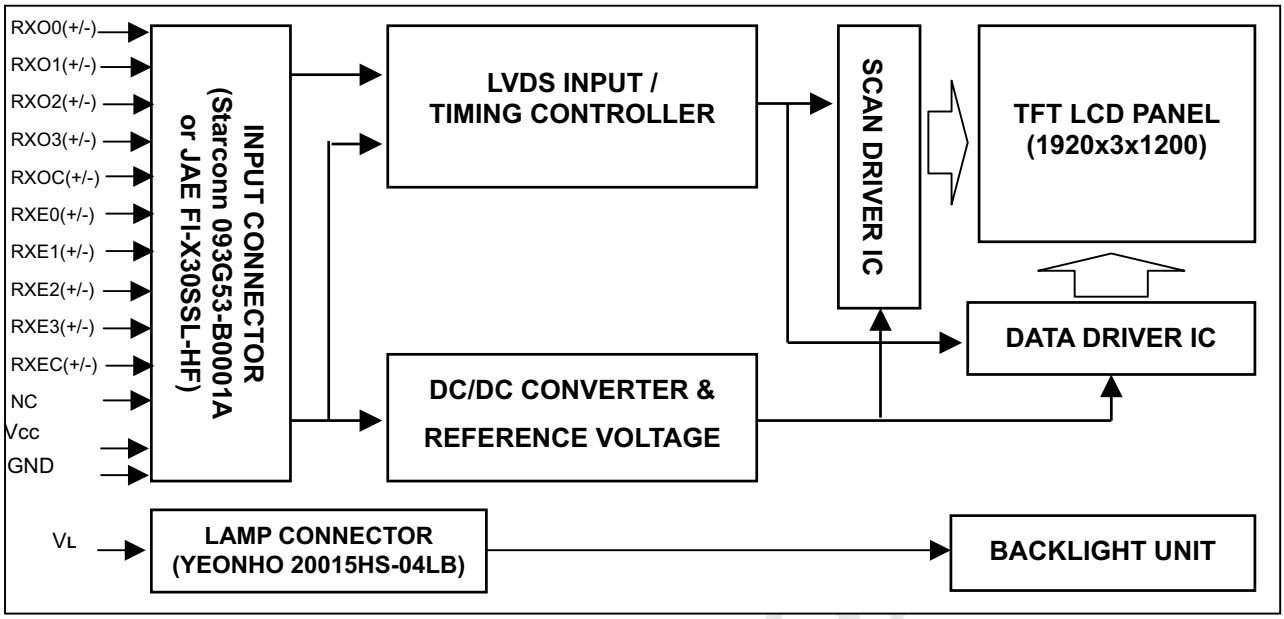

4.2 BACKLIGHT UNIT

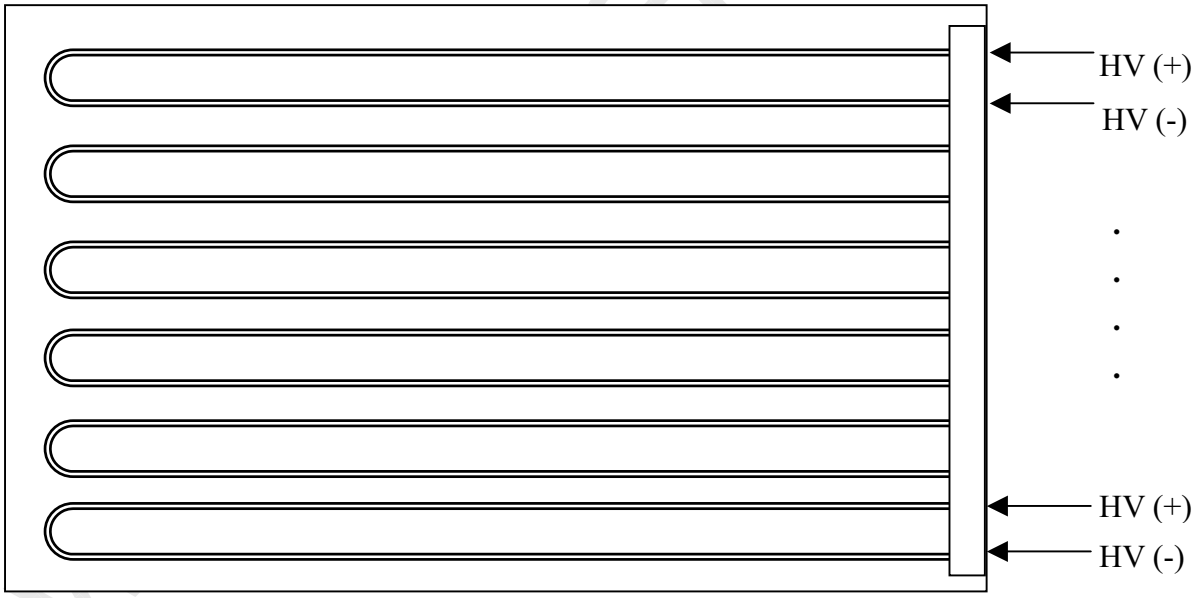

One step solution for LCD / PDP / OLED panel application: Datasheet, inventory and accessory! www.panelook.com

Global LCD Panel Exchange Center www.panelook.com 屏库:全球液晶屏交易中心

5. INPUT TERMINAL PIN ASSIGNMENT

5.1 TFT LCD MODULE

Pin	Name	Description
1	RXO0-	Negative LVDS differential data input. Channel O0 (odd)
2	RXO0+	Positive LVDS differential data input. Channel O0 (odd)
3	RXO1-	Negative LVDS differential data input. Channel O1 (odd)
4	RXO1+	Positive LVDS differential data input. Channel O1 (odd)
5	RXO2-	Negative LVDS differential data input. Channel O2 (odd)
6	RXO2+	Positive LVDS differential data input. Channel O2 (odd)
7	GND	Ground
8	RXOC-	Negative LVDS differential clock input. (odd)
9	RXOC+	Positive LVDS differential clock input. (odd)
10	RXO3-	Negative LVDS differential data input. Channel O3(odd)
11	RXO3+	Positive LVDS differential data input. Channel O3 (odd)
12	RXE0-	Negative LVDS differential data input. Channel E0 (even)
13	RXE0+	Positive LVDS differential data input. Channel E0 (even)
14	GND	Ground
15	RXE1-	Negative LVDS differential data input. Channel E1 (even)
16	RXE1+	Positive LVDS differential data input. Channel E1 (even)
17	GND	Ground
18	RXE2-	Negative LVDS differential data input. Channel E2 (even)
19	RXE2+	Positive LVDS differential data input. Channel E2 (even)
20	RXEC-	Negative LVDS differential clock input. (even)
21	RXEC+	Positive LVDS differential clock input. (even)
22	RXE3-	Negative LVDS differential data input. Channel E3 (even)
23	RXE3+	Positive LVDS differential data input. Channel E3 (even)
24	GND	Ground
25	NC	No connection
26	NC	No connection.
27	VCC	+5.0V power supply
28	VCC	+5.0V power supply
29	VCC	+5.0V power supply
30	VCC	+5.0V power supply

Note (1) Connector Part No.: Starconn 093G53-B0001A or JAE FI-X30SSL-HF.

Note (2) The first pixel is odd.

Note (3) Input signal of even and odd clock should be the same timing.

www.panelook.com

One step solution for LCD / PDP / OLED panel application: Datasheet, inventory and accessory! www.panelook.com

Global LCD Panel Exchange Center www.panelook.com 屏库:全球液晶屏交易中心

SELLVDS = Low or Open								
LVDS Channel E0	LVDS output	D7	D6	D4	D3	D2	D1	D0
	Data order	EG0	ER5	ER4	ER3	ER2	ER1	ER0
LVDS Channel E1	LVDS output	D18	D15	D14	D13	D12	D9	D8
	Data order	EB1	EB0	EG5	EG4	EG3	EG2	EG1
LVDS Channel E2	LVDS output	D26	D25	D24	D22	D21	D20	D19
	Data order	DE	NA	NA	EB5	EB4	EB3	EB2
LVDS Channel E3	LVDS output	D23	D17	D16	D11	D10	D5	D27
	Data order	NA	EB7	EB6	EG7	EG6	ER7	ER6
LVDS Channel O0	LVDS output	D7	D6	D4	D3	D2	D1	D0
	Data order	OG0	OR5	OR4	OR3	OR2	OR1	OR0
LVDS Channel O1	LVDS output	D18	D15	D14	D13	D12	D9	D8
	Data order	OB1	OB0	OG5	OG4	OG3	OG2	OG1
LVDS Channel O2	LVDS output	D26	D25	D24	D22	D21	D20	D19
	Data order	DE	NA	NA	OB5	OB4	OB3	OB2
LVDS Channel O3	LVDS output	D23	D17	D16	D11	D10	D5	D27
	Data order	NA	OB7	OB6	OG7	OG6	OR7	OR6

5.2 BACKLIGHT UNIT:

Pin	Symbol	Description	Remark
1-1	HV	High Voltage	Pink
1-2	HV	High Voltage	White
2-3	HV	High Voltage	Pink
2-4	HV	High Voltage	White
3-5	HV	High Voltage	Pink
3-6	HV	High Voltage	White
4-7	HV	High Voltage	Pink
4-8	HV	High Voltage	White
5-9	HV	High Voltage	Pink
5-10	HV	High Voltage	White
6-11	HV	High Voltage	Pink
6-12	HV	High Voltage	White

Note (1) Connector Part No.: 20015HS-04LB (YEONHO) or equivalent

www.panelook.com

One step solution for LCD / PDP / OLED panel application: Datasheet, inventory and accessory! www.panelook.com

Global LCD Panel Exchange Center www.panelook.com 屏库:全球液晶屏交易中心

5.3 COLOR DATA INPUT ASSIGNMENT

The brightness of each primary color (red, green and blue) is based on the 8-bit gray scale data input for the color. The higher the binary input, the brighter the color. The table below provides the assignment of color versus data input.

Color		Data Signal																							
		Red								Green								Blue							
		R7	R6	R5	R4	R3	R2	R1	R0	R7	R6	G5	G4	G3	G2	G1	G0	R7	R6	B5	B4	B3	B2	B1	B0
Basic Colors	Black	0	0	0	0	0	0	0	0	0	0	0	0	0	0	0	0	0	0	0	0	0	0	0	0
	Red	1	1	1	1	1	1	1	1	0	0	0	0	0	0	0	0	0	0	0	0	0	0	0	0
	Green	0	0	0	0	0	0	0	0	1	1	1	1	1	1	1	1	0	0	0	0	0	0	0	0
	Blue	0	0	0	0	0	0	0	0	0	0	0	0	0	0	0	0	1	1	1	1	1	1	1	1
	Cyan	0	0	0	0	0	0	0	0	1	1	1	1	1	1	1	1	1	1	1	1	1	1	1	1
	Magenta	1	1	1	1	1	1	1	1	0	0	0	0	0	0	0	0	1	1	1	1	1	1	1	1
	Yellow	1	1	1	1	1	1	1	1	1	1	1	1	1	1	1	1	0	0	0	0	0	0	0	0
	White	1	1	1	1	1	1	1	1	1	1	1	1	1	1	1	1	1	1	1	1	1	1	1	1
Gray Scale Of Red	Red(0) / Dark	0	0	0	0	0	0	0	0	0	0	0	0	0	0	0	0	0	0	0	0	0	0	0	0
	Red(1)	0	0	0	0	0	0	0	1	0	0	0	0	0	0	0	0	0	0	0	0	0	0	0	0
	Red(2)	0	0	0	0	0	0	1	0	0	0	0	0	0	0	0	0	0	0	0	0	0	0	0	0
	:	:	:	:	:	:	:	:	:	:	:	:	:	:	:	:	:	:	:	:	:	:	:	:	:
	:	:	:	:	:	:	:	:	:	:	:	:	:	:	:	:	:	:	:	:	:	:	:	:	:
	Red(253)	1	1	1	1	1	1	0	1	0	0	0	0	0	0	0	0	0	0	0	0	0	0	0	0
	Red(254)	1	1	1	1	1	1	1	0	0	0	0	0	0	0	0	0	0	0	0	0	0	0	0	0
	Red(255)	1	1	1	1	1	1	1	1	0	0	0	0	0	0	0	0	0	0	0	0	0	0	0	0
Gray Scale Of Green	Green(0) / Dark	0	0	0	0	0	0	0	0	0	0	0	0	0	0	0	0	0	0	0	0	0	0	0	0
	Green(1)	0	0	0	0	0	0	0	0	0	0	0	0	0	0	0	1	0	0	0	0	0	0	0	0
	Green(2)	0	0	0	0	0	0	0	0	0	0	0	0	0	0	1	0	0	0	0	0	0	0	0	0
	:	:	:	:	:	:	:	:	:	:	:	:	:	:	:	:	:	:	:	:	:	:	:	:	:
	:	:	:	:	:	:	:	:	:	:	:	:	:	:	:	:	:	:	:	:	:	:	:	:	:
	Green(253)	0	0	0	0	0	0	0	0	1	1	1	1	1	1	0	1	0	0	0	0	0	0	0	0
	Green(254)	0	0	0	0	0	0	0	0	1	1	1	1	1	1	1	0	0	0	0	0	0	0	0	0
	Green(255)	0	0	0	0	0	0	0	0	1	1	1	1	1	1	1	1	0	0	0	0	0	0	0	0
Gray Scale Of Blue	Blue(0) / Dark	0	0	0	0	0	0	0	0	0	0	0	0	0	0	0	0	0	0	0	0	0	0	0	0
	Blue(1)	0	0	0	0	0	0	0	0	0	0	0	0	0	0	0	0	0	0	0	0	0	0	0	1
	Blue(2)	0	0	0	0	0	0	0	0	0	0	0	0	0	0	0	0	0	0	0	0	0	0	1	0
	:	:	:	:	:	:	:	:	:	:	:	:	:	:	:	:	:	:	:	:	:	:	:	:	:
	:	:	:	:	:	:	:	:	:	:	:	:	:	:	:	:	:	:	:	:	:	:	:	:	:
	Blue(253)	0	0	0	0	0	0	0	0	0	0	0	0	0	0	0	0	1	1	1	1	1	1	0	1
	Blue(254)	0	0	0	0	0	0	0	0	0	0	0	0	0	0	0	0	1	1	1	1	1	1	1	0
	Blue(255)	0	0	0	0	0	0	0	0	0	0	0	0	0	0	0	0	1	1	1	1	1	1	1	1

Note (1) 0: Low Level Voltage, 1: High Level Voltage

One step solution for LCD / PDP / OLED panel application: Datasheet, inventory and accessory! www.panelook.com

Global LCD Panel Exchange Center www.panelook.com 屏库:全球液晶屏交易中心

6. INTERFACE TIMING

6.1 INPUT SIGNAL TIMING SPECIFICATIONS

The input signal timing specifications are shown as the following table and timing diagram.

Signal	Item	Symbol	Min.	Typ.	Max.	Unit	Note
LVDS Clock	Frequency	Fc	50.0	77	83.0	MHz	-
	Period	Tc	-	13.0	-	ns	
	High Time	Tch	-	4/7	-	Tc	-
	Low Time	Tcl	-	3/7	-	Tc	-
LVDS Data	Setup Time	Tlvs	600	-	-	ps	-
	Hold Time	Tlvh	600	-	-	ps	-
Vertical Active Display Term	Frame Rate	Fr	40	60	63	Hz	Tv=Tvd+Tvb
	Total	Tv	1209	1235	1245	Th	-
	Display	Tvd	1200	1200	1200	Th	-
	Blank	Tvb	9	35	Tv-Tvd	Th	-
Horizontal Active Display Term	Total	Th	1030	1040	1075	Tc	Th=Thd+Thb
	Display	Thd	960	960	960	Tc	-
	Blank	Thb	70	80	Th-Thd	Tc	-

Note: Because this module is operated by DE only mode, Hsync and Vsync input signals should be set to low logic level or ground. Otherwise, this module would operate abnormally.

INPUT SIGNAL TIMING DIAGRAM

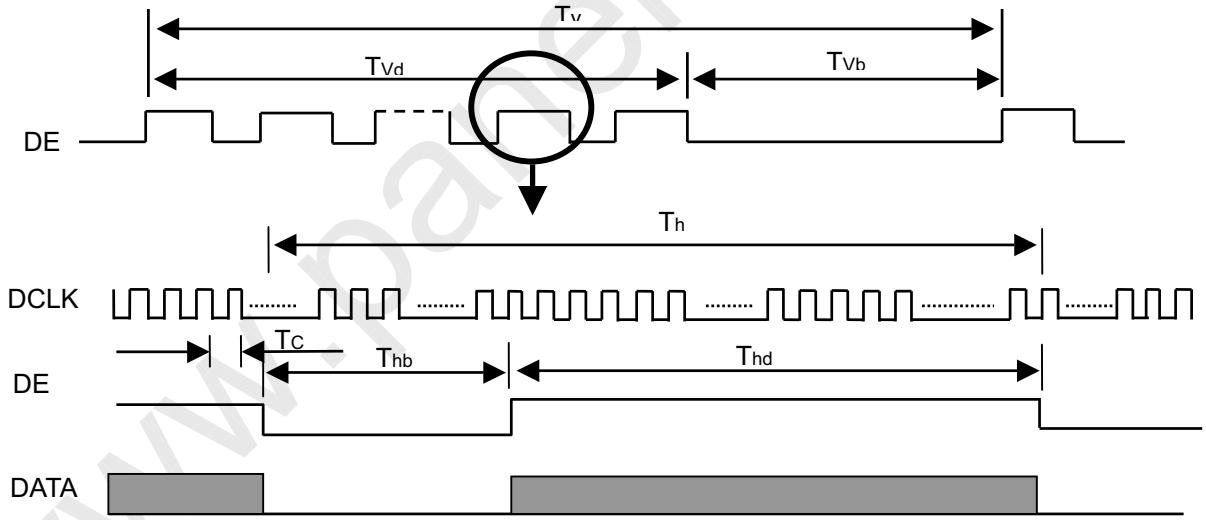

One step solution for LCD / PDP / OLED panel application: Datasheet, inventory and accessory! www.panelook.com

Global LCD Panel Exchange Center www.panelook.com 屏库:全球液晶屏交易中心

6.2 POWER ON/OFF SEQUENCE

To prevent a latch-up or DC operation of LCD module, the power on/off sequence should be as the diagram below.

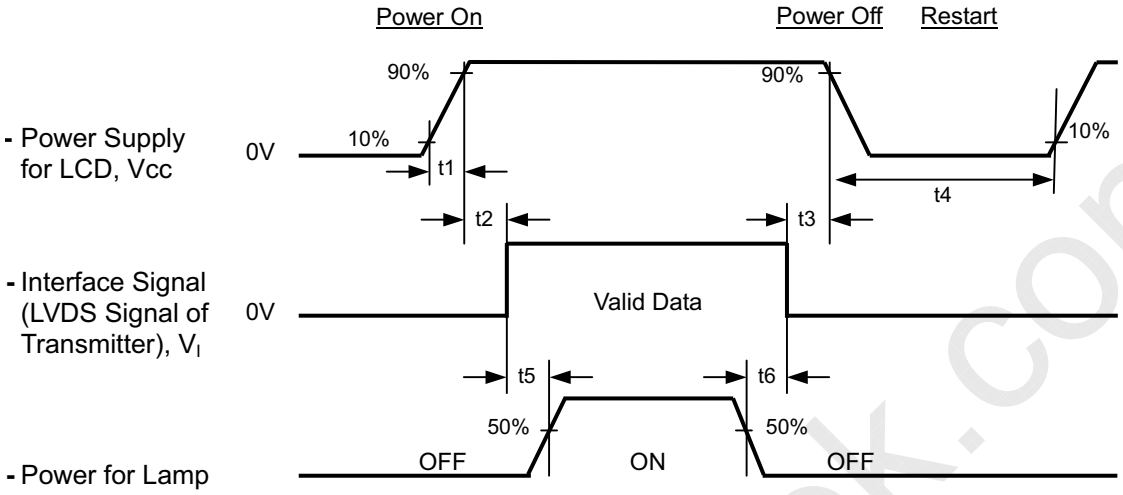

Timing Specifications:

0.5< t1 ≦ 10 msec

0 < t2 ≦ 50 msec

0 < t3 ≦ 50 msec

t4 ≧ 500 msec

t5 ≧ 500 msec

t6 ≧ 90 msec

One step solution for LCD / PDP / OLED panel application: Datasheet, inventory and accessory! www.panelook.com

Global LCD Panel Exchange Center www.panelook.com 屏库:全球液晶屏交易中心

7. OPTICAL CHARACTERISTICS

7.1 TEST CONDITIONS

Item	Symbol	Value	Unit
Ambient Temperature	Ta	25±2	°C
Ambient Humidity	Ha	50±10	%RH
Supply Voltage	V_{CC}	5.0	V
Input Signal	According to typical value in "3. ELECTRICAL CHARACTERISTICS"		
Lamp Current	I_L	6.0	mA
Inverter Operating Frequency	F_L	50	KHz
Inverter	DARFON VK88070F02		

7.2 OPTICAL SPECIFICATIONS

The relative measurement methods of optical characteristics are shown in 7.2. The following items should be measured under the test conditions described in 7.1 and stable environment shown in Note (5).

Item		Symbol	Condition	Min.	Typ.	Max.	Unit	Note
Color Chromaticity (CIE 1931)	Red	Rx	θ_x=0°, θ_Y =0° CS-1000T	Typ - 0.03	0.640	Typ + 0.03	-	(1), (5)
		Ry			0.348			
	Green	Gx			0.293			
		Gy			0.585			
	Blue	Bx			0.143			
		By			0.075			
	White	Wx			0.313			
		Wy			0.329			
Center Luminance of White (Center of Screen)		L_C		240	300	-	cd/m²	(4), (5)
Contrast Ratio		CR		700	1000	-	-	(2), (5)
Response Time		T_R	θ_x=0°, θ_Y =0°	-	13	18	ms	(3), (7)
		T_F		-	7	12		
		$T_{GtG\ AVE}$		-	8	13		
White Variation		δW	θ_x=0°, θ_Y =0° CA-210	-	1.25	1.40	-	(5), (6)
Viewing Angle	Horizontal	θ_x+	CR ≧ 10 CA-210	80	88	-	Deg.	(1), (5)
		θ_x-		80	88	-		
	Vertical	θ_Y+		80	88	-		
		θ_Y-		80	88	-		

One step solution for LCD / PDP / OLED panel application: Datasheet, inventory and accessory! www.panelook.com

Global LCD Panel Exchange Center www.panelook.com 屏库:全球液晶屏交易中心

Note (1) Definition of Viewing Angle (θx, θy):

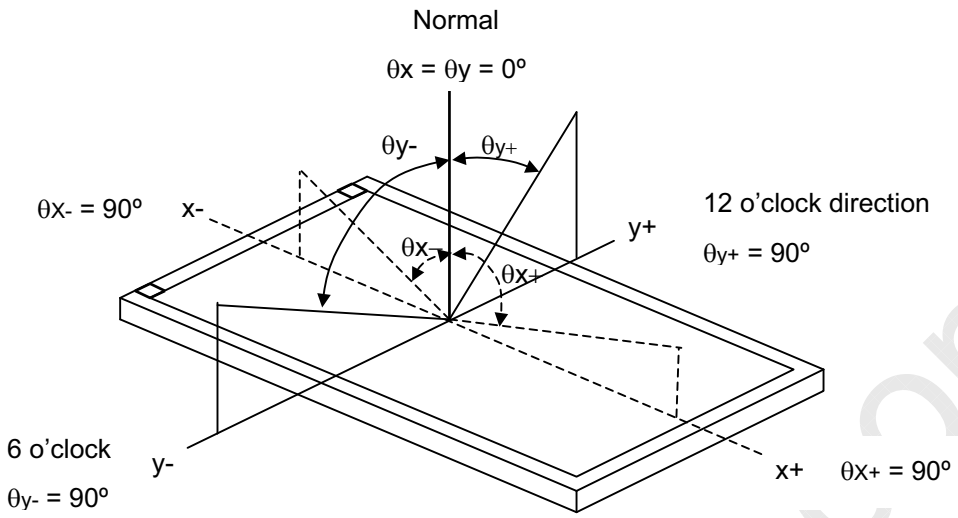

Note (2) Definition of Contrast Ratio (CR):

The contrast ratio can be calculated by the following expression.

Contrast Ratio (CR) = L255 / L0

L255: Luminance of gray level 255

L 0: Luminance of gray level 0

CR = CR (1)

CR (X) is corresponding to the Contrast Ratio of the point X at Figure in Note (6).

Note (3) Definition of Response Time (T_R, T_F):

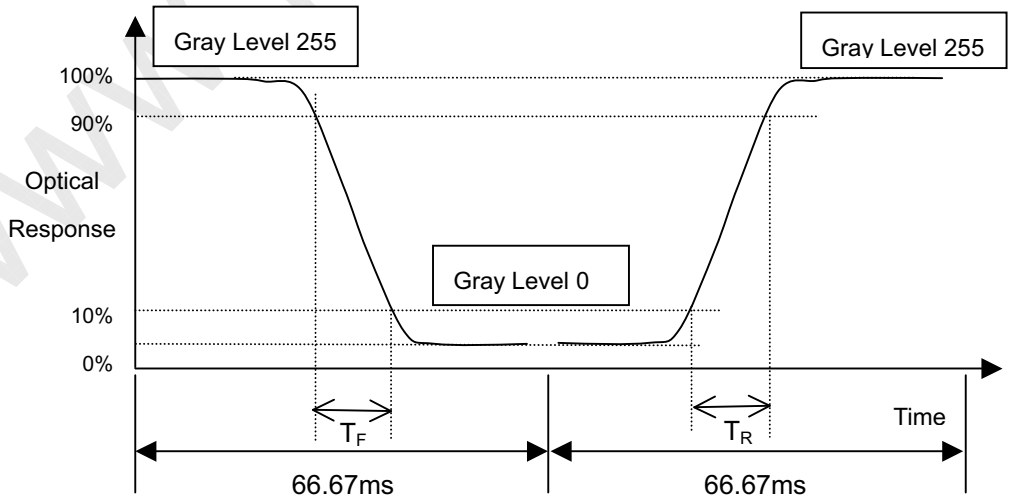

One step solution for LCD / PDP / OLED panel application: Datasheet, inventory and accessory! www.panelook.com

Global LCD Panel Exchange Center www.panelook.com 屏库:全球液晶屏交易中心

Note (4) Definition of Luminance of White (L_C):

Measure the luminance of gray level 255 at center point

$L_C = L(1)$

L (x) is corresponding to the luminance of the point X at Figure in Note (6).

Note (5) Measurement Setup:

The LCD module should be stabilized at given temperature for 20 minutes to avoid abrupt temperature change during measuring. In order to stabilize the luminance, the measurement should be executed after lighting Backlight for 20 minutes in a windless room.

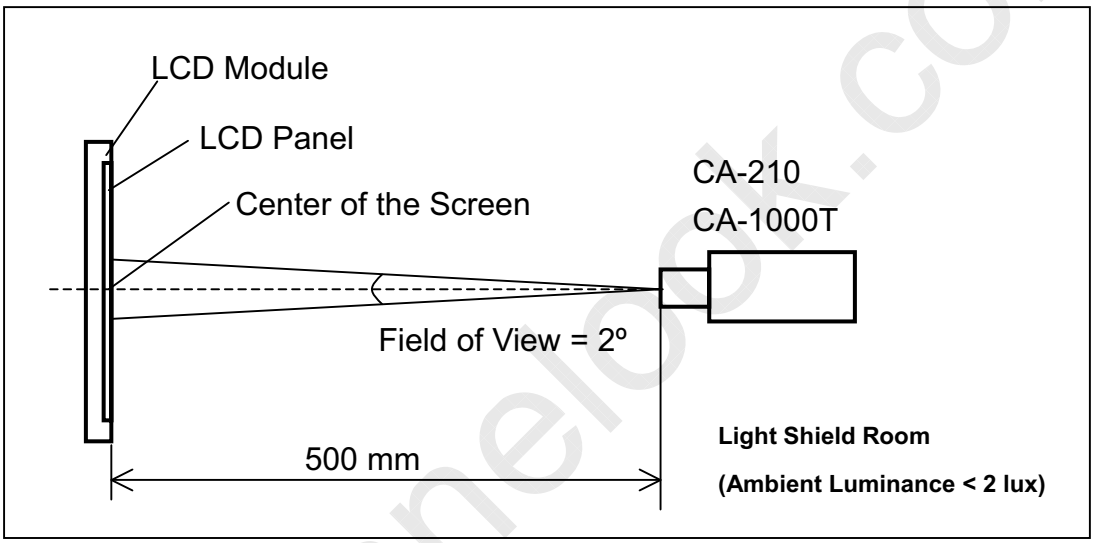

One step solution for LCD / PDP / OLED panel application: Datasheet, inventory and accessory! www.panelook.com

Global LCD Panel Exchange Center www.panelook.com 屏库:全球液晶屏交易中心

Note (6) Definition of White Variation (δW):

Measure the luminance of gray level 255 at 13 points

$$\delta W = \frac{\text{Maximum [L(1), L(2), L(3), L(4), L(5), L(6), L(7), L(8), L(9), L(10), L(11), L(12), L(13)]}}{\text{Minimum [L(1), L(2), L(3), L(4), L(5), L(6), L(7), L(8), L(9), L(10), L(11), L(12), L(13)]}}$$

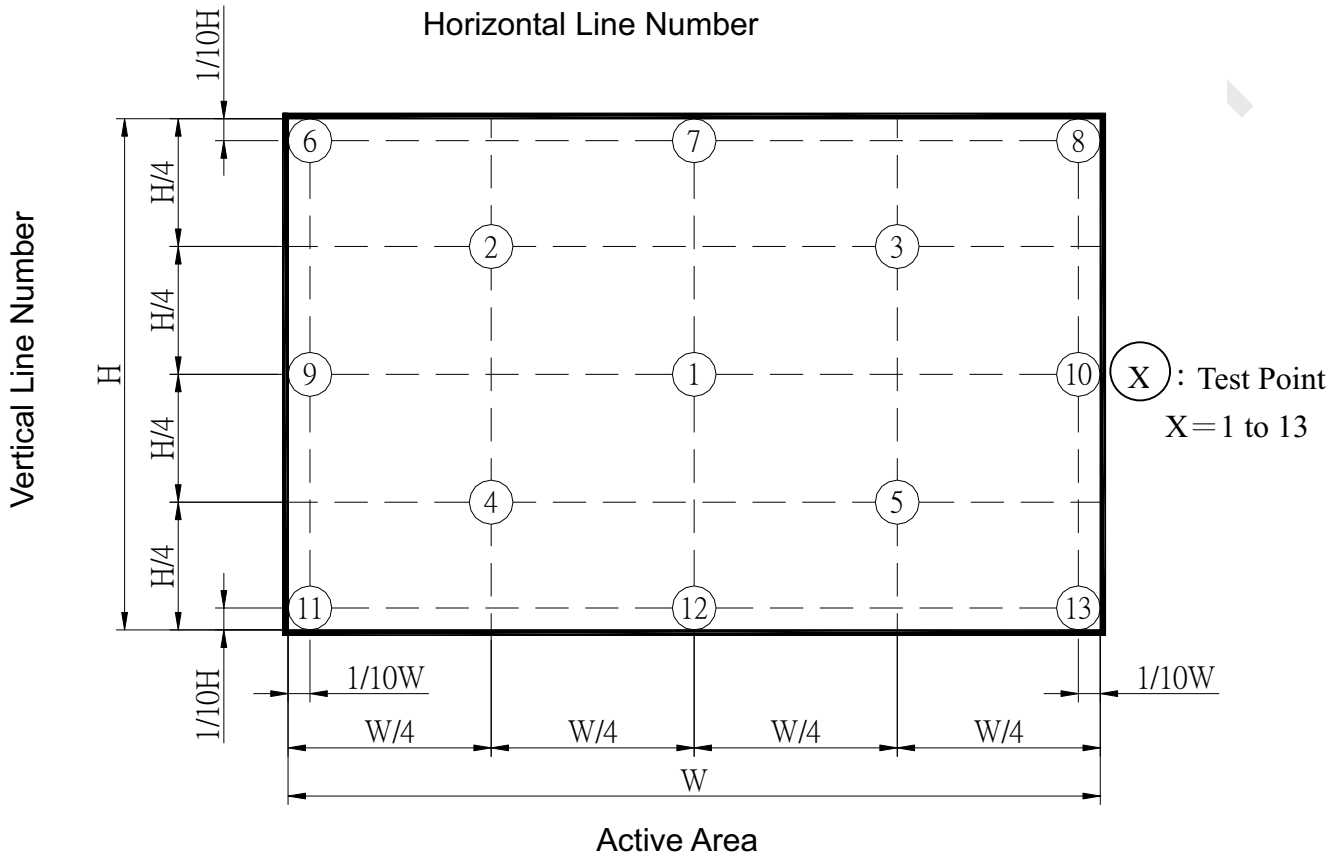

Note (7) Definition of Response Time (T_{GTG_AVE}):

T_{GTG_AVE} is defined as the total average response time for "Gray To Gray ".

The Gray to Gray response time is defined as the following chart.

Gray to Gray		Target Gray								
		G0	G32	G64	G96	G128	G160	G192	G224	G255
Initial Gray	G0									
	G32									
	G64									
	G96									
	G128									
	G160									
	G192									
	G224									
	G255									

One step solution for LCD / PDP / OLED panel application: Datasheet, inventory and accessory! www.panelook.com

Global LCD Panel Exchange Center www.panelook.com 屏库:全球液晶屏交易中心

8. PACKAGING

8.1 PACKING SPECIFICATIONS

(1) 5 LCD modules / 1 Box

(2) Box dimensions: 645(L) X 377(W) X 470(H) mm

(3) Weight: approximately 16.5Kg (5 modules per box)

8.2 PACKING METHOD

(1) Carton Packing should have no failure in the following reliability test items.

Test Item	Test Conditions	Note
Vibration	ISTA STANDARD Random, Frequency Range: 1 – 200 Hz Top & Bottom: 30 minutes (+Z), 10 min (-Z), Right & Left: 10 minutes (X) Back & Forth 10 minutes (Y)	Non Operation
Dropping Test	1 Angle, 3 Edge, 6 Face, 60cm	Non Operation

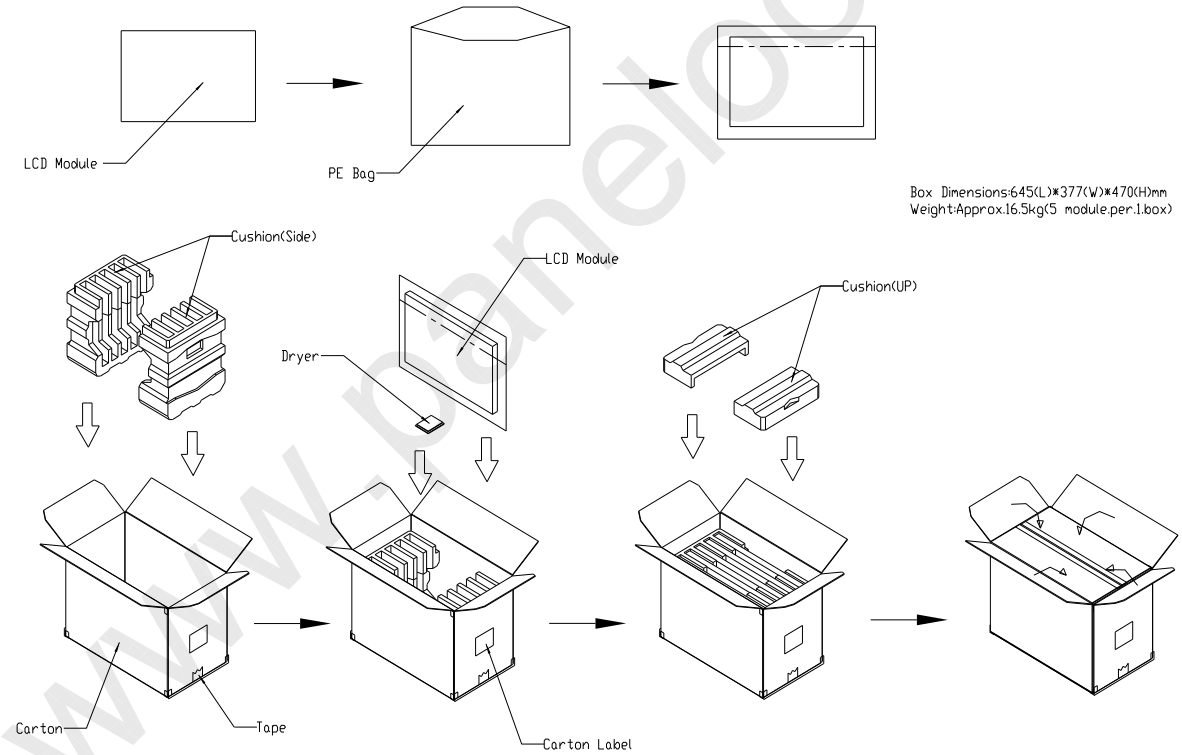

Figure. 8-1 Packing method

One step solution for LCD / PDP / OLED panel application: Datasheet, inventory and accessory! www.panelook.com

Global LCD Panel Exchange Center www.panelook.com 屏库:全球液晶屏交易中心

For ocean shipping

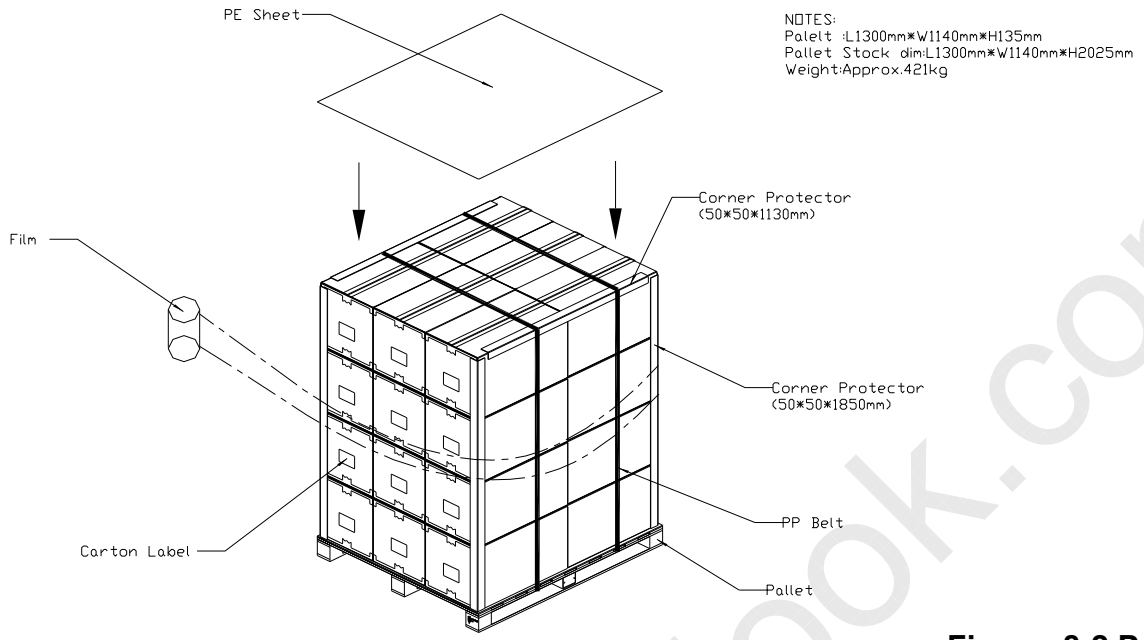

Figure. 8-2 Packing method

For air transport

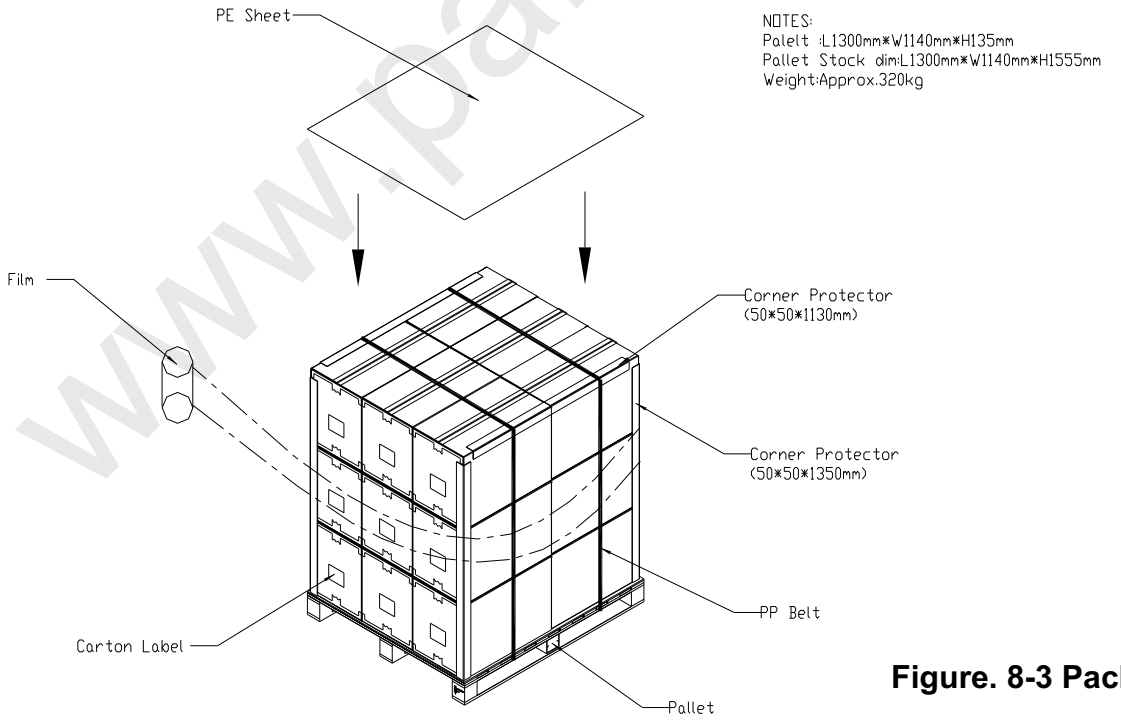

Figure. 8-3 Packing method

One step solution for LCD / PDP / OLED panel application: Datasheet, inventory and accessory! www.panelook.com

Global LCD Panel Exchange Center www.panelook.com 屏库:全球液晶屏交易中心

9. DEFINITION OF LABELS

9.1 CMO MODULE LABEL

The barcode nameplate is pasted on each module as illustration, and its definitions are as following explanation.

(a) Model Name: M240J1-L01

(b) Revision: Rev. XX, for example: A0, A1… B1, B2… or C1, C2…etc.

(c) CMO barcode definition:

Serial ID: XX-XX-X-XX-YMD-L-NNNN

Code	Meaning	Description
XX	CMO internal use	-
XX	Revision	Cover all the change
X	CMO internal use	-
XX	CMO internal use	-
YMD	Year, month, day	Year: 2001=1, 2002=2, 2003=3, 2004=4… Month: 1~12=1, 2, 3, ~, 9, A, B, C Day: 1~31=1, 2, 3, ~, 9, A, B, C, ~, W, X, Y, exclude I, O, and U.
L	Product line #	Line 1=1, Line 2=2, Line 3=3, …
NNNN	Serial number	Manufacturing sequence of product

(d) Customer's barcode definition:

Serial ID: CM-24J11-X-X-X-XX-L-XX-L-YMD-NNNN

Code	Meaning	Description
CM	Supplier code	CMO=CM
24J11	Model number	M240J1-L01 = 24J11
X	Revision code	Non ZBD: 1,~,9,0 / ZBD: A~Z
X	Source driver IC code	Century=1, CLL=2, Demos=3, Epson=4, Fujitsu=5, Himax=6, Hitachi=7, Hynix=8, LDI=9, Matsushita=A, NEC=B, Novatec=C, OKI=D, Philips=E, Renasas=F, Samsung=G, Sanyo=H, Sharp=I, TI=J, Topro=K, Toshiba=L, Windbond=M
X	Gate driver IC code	
XX	Cell location	Tainan Taiwan=TN, Ningbo China=CN
L	Cell line #	1~12=0~C
XX	Module location	Tainan Taiwan=TN, Ningbo China=CN
L	Module line #	1~12=0~C
YMD	Year, month, day	Year: 2001=1, 2002=2, 2003=3, 2004=4… Month: 1~12=1, 2, 3, ~, 9, A, B, C Day: 1~31=1, 2, 3, ~, 9, A, B, C, ~, T, U, V
NNNN	Serial number	By LCD supplier

One step solution for LCD / PDP / OLED panel application: Datasheet, inventory and accessory! www.panelook.com

Global LCD Panel Exchange Center www.panelook.com 屏库:全球液晶屏交易中心

10. PRECAUTIONS

10.1 ASSEMBLY AND HANDLING PRECAUTIONS

(1) Do not apply rough force such as bending or twisting to the module during assembly.

(2) To assemble or install module into user's system can be only in clean working areas. The dust and oil may cause electrical short or worsen the polarizer.

(3) It's not permitted to have pressure or impulse on the module because the LCD panel and Backlight will be damaged.

(4) Always follow the correct power sequence when LCD module is connecting and operating. This can prevent damage to the CMOS LSI chips during latch-up.

(5) Do not pull the I/F connector in or out while the module is operating.

(6) Do not disassemble the module.

(7) Use a soft dry cloth without chemicals for cleaning, because the surface of polarizer is very soft and easily scratched.

(8) It is dangerous that moisture come into or contacted the LCD module, because moisture may damage LCD module when it is operating.

(9) High temperature or humidity may reduce the performance of module. Please store LCD module within the specified storage conditions.

(10) When ambient temperature is lower than 10ºC may reduce the display quality. For example, the response time will become slowly, and the starting voltage of CCFL will be higher than room temperature.

10.2 SAFETY PRECAUTIONS

(1) The startup voltage of Backlight is approximately 1000 Volts. It may cause electrical shock while assembling with inverter. Do not disassemble the module or insert anything into the Backlight unit.

(2) If the liquid crystal material leaks from the panel, it should be kept away from the eyes or mouth. In case of contact with hands, skin or clothes, it has to be washed away thoroughly with soap.

(3) After the module's end of life, it is not harmful in case of normal operation and storage.

One step solution for LCD / PDP / OLED panel application: Datasheet, inventory and accessory! www.panelook.com

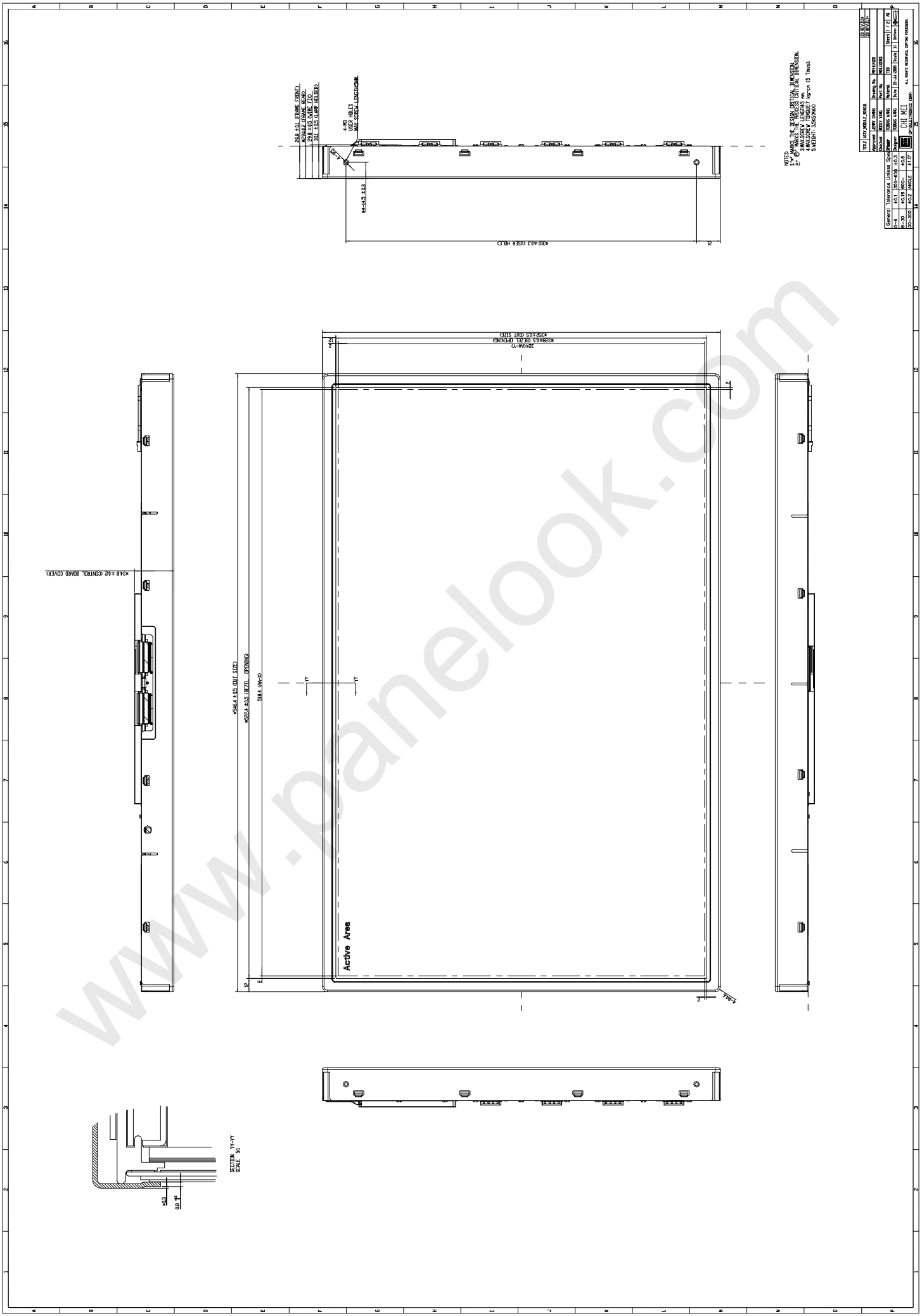

www.panelook.com

One step solution for LCD / PDP / OLED panel application: Datasheet, inventory and accessory! www.panelook.com

Global LCD Panel Exchange Center www.panelook.com 屏库:全球液晶屏交易中心

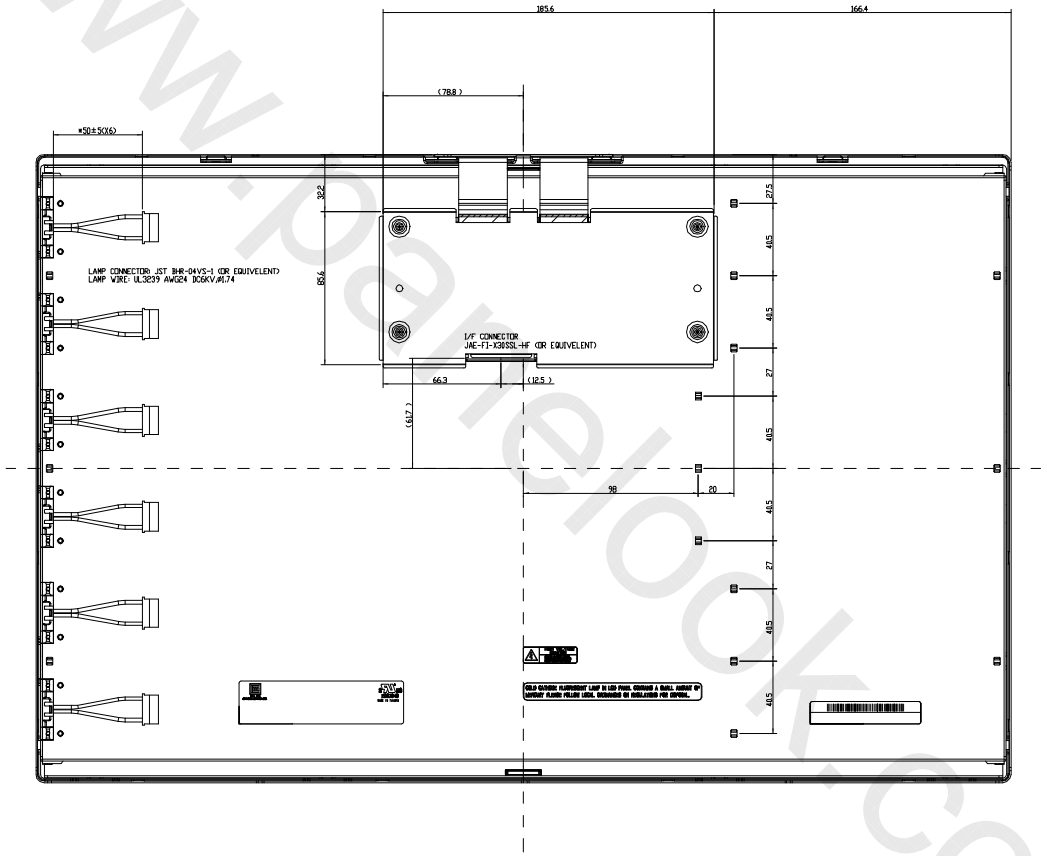

Mark	Description	Date	Changed_By	Approved_By	ECN No.	Remark

General Tolerance Unless Specified			
0~6	±0.1	300~600	±0.3
6~30	±0.15	600~	±0.6
30~300	±0.2	ANGLE	±1.0°

TITLE	ASSY_MODULE_M240J1						ID REV:1.1+ SD REV:1.1+
Approved	JENNY CHANG	Drawing No.	M240J1G01				
Checked	RICKY YANG	Part No.	M240J1G01XX				
Drawer	TOBIAS WANG	Material	TBD	Sheet	2 / 2	A0	
Designer	TOBIAS WANG	Date	15-JUL-2005	Scale	1/	Unitmm	

CHI MEI OPTOELECTRONICS CORP.

ALL RIGHTS RESERVED, COPYING FORBIDDEN.